Vacuum Switch

VSA200, VSD200

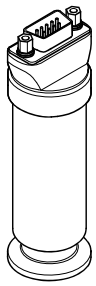

Operating Manual
Incl. EC Declaration of Conformity

tina65e1 (2011-01)

Product Identification

In all communications with INFICON, please specify the information on the product nameplate. For convenient reference copy that information into the space provided below.

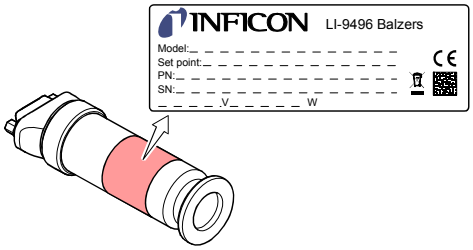

Validity

This document applies to products with the following part numbers:

VSA200

3SA1-xxx-xxx0

- Set-point value
- Flange: 1 ⇒ DN 16 ISO-KF; C ⇒ 4 VCR male; D ⇒ 4 VCR female
- Unit: F5 ⇒ 1000 Torr; G6 ⇒ 1100 mbar

VSD200

3SD1-Mxx-xxx0

- Setpoint value
- Sign: A ⇒ +; B ⇒ –
- Flange: 1 ⇒ DN 16 ISO-KF; C ⇒ 4 VCR male; D ⇒ 4 VCR female
- Unit: 5 ⇒ Torr; 6 ⇒ mbar

The part number (PN) can be taken from the product nameplate.

If not indicated otherwise in the legends, the illustrations in this document correspond to the vacuum switch with vacuum connection DN 16 ISO-KF. They apply to vacuum switches with other vacuum connection by analogy.

We reserve the right to make technical changes without prior notice.

All dimensions in mm.

Intended Use

The vacuum switches have been designed for the use in vacuum systems as absolute pressure switch (VSA200) or as differential pressure switch (VSD200) in different measurement ranges.

Trademark

VCR® Swagelok Marketing Co.

Safety

Symbols Used

DANGER

Information on preventing any kind of physical injury.

WARNING

Information on preventing extensive equipment and environmental damage.

Caution

Information on correct handling or use. Disregard can lead to malfunctions or minor equipment damage.

Personnel Qualifications

Skilled personnel

All work described in this document may only be carried out by persons who have suitable technical training and the necessary experience or who have been instructed by the end-user of the product.

General Safety Instructions

- Adhere to the applicable regulations and take the necessary precautions for the process media used.
  Consider possible reactions between the materials and the process media.
- Adhere to the applicable regulations and take the necessary precautions for all work you are going to do and consider the safety instructions in this document.
- Before beginning to work, find out whether any vacuum components are contaminated. Adhere to the relevant regulations and take the necessary precautions when handling contaminated parts.

Communicate the safety instructions to all other users.

Liability and Warranty

INFICON assumes no liability and the warranty becomes null and void if the end-user or third parties

- disregard the information in this document
- use the product in a non-conforming manner
- make any kind of interventions (modifications, alterations etc.) on the product
- use the product with accessories not listed in the product documentation.

The end-user assumes the responsibility in conjunction with the process media used.

Gauge failures due to contamination or wear and tear, are not covered by the warranty.

Technical Data

Measurement range	
VSA200 (absolute)	1100 mbar (F.S.) 1000 Torr (F.S.)
VSD200 (relative to atm)	-100 … +50 mbar, Torr
Setpoint (setting range)	
VSA200	30 … 1060 mbar 20 … 970 Torr
VSD200	-99 … +46 mbar, Torr
Switching contact	changeover contact, floating
Hysteresis	2 % above setpoint
Contact rating	30 V, 1 A DC 125 V, 0.3 A AC
Switching characteristics [1]	Low Trip Point
Accuracy	≤0.5 % F.S.
Resolution	10 bit
Switching frequency	0.5 Hz
Response time	≤45 ms
Temperature effect on zero and span	≤±0.02 % F.S. / 1K
Long-term stability	≤±0.5 % F.S. / a
Effect supply voltage	≤±0.005 % F.S. / V
Starting time	1 s
Service live	$>1\times10^8$ cycles
Electronic	25'000 h
Relay	$>3\times10^6$ cycles
Supply	
Supply voltage	+14 … +30 VDC
Current consumption	≤15 mA
Power consumption	≤0.5 W
Electrical connection	D-Sub, 9 pin, male
Cable	6 pin plus shielding
Cable length	≤100 m (8×0.14 mm²)
Materials exposed to vacuum	
Housing	1.4571, 1.4404
Diaphragm	1.4435
Internal volume	
DN 16 ISO-KF	2.81 cm³
4 VCR®	0.93 cm³
Admissible pressure (abs.)	
VSA200	5 bar
VSD200	2 bar
Admissible temperatures	
Operation	0 … +70 °C
Storage	–40 … +80
Relative humidity	≤80 at temperatures up to ≤+31 °C, decreasing to 50 at +40 °C
Use	indoors only, altitude up to 4000 m NN
Mounting orientation	any
Degree of protection	IP40

DANGER

The vacuum switch may only be connected to power supplies, instruments or control devices that conform to the requirements of a grounded extra-low voltage (SELV). The connection to the vacuum switch has to be fused.

[1] The switching characteristics and the setpoint can be programmed via the serial interface (pin 6, 7, 8).

Dimensions [mm]

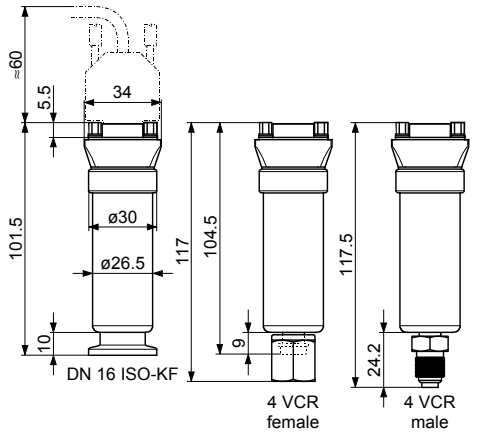

Weight	≈140 g

Installation

Vacuum Connection

DANGER

DANGER: overpressure in the vacuum system >1 bar

Injury caused by released parts and harm caused by escaping process gases can result if clamps are opened while the vacuum system is pressurized.

Do not open any clamps while the vacuum system is pressurized. Use the type of clamps which are suited to overpressure.

DANGER

DANGER: overpressure in the vacuum system >2.5 bar

KF connections with elastomer seals (e.g. O-rings) cannot withstand such pressures. Process media can thus leak and possibly damage your health.

Use O-rings provided with an outer centering ring.

DANGER

DANGER: protective ground

Incorrectly grounded products can be extremely hazardous in the event of a fault.

The gauge must be electrically connected to the grounded vacuum chamber. This connection must conform to the requirements of a protective connection according to EN 61010:

- VCR® connections fulfill this requirement.
- For gauges with a KF connection, use a conductive metallic clamping ring.

Caution

Caution: vacuum component

Dirt and damages impair the function of the vacuum component.

When handling vacuum components, take appropriate measures to ensure cleanliness and prevent damages.

Caution

Caution: dirt sensitive area

Touching the product or parts thereof with bare hands increases the desorption rate.

Always wear clean, lint-free gloves and use clean tools when working in this area.

Remove the protective lid and install the product to the vacuum system.

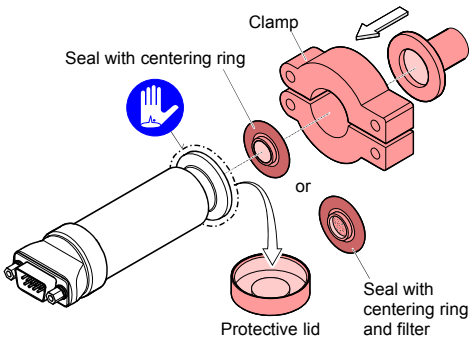

Keep the protective lid.

Power Connection

Make sure the vacuum connection is properly made (→ "Vacuum Connection").

Before connecting or disconnecting the product, turn off the control system.

1. If no sensor cable is available, make one according to the following diagram.

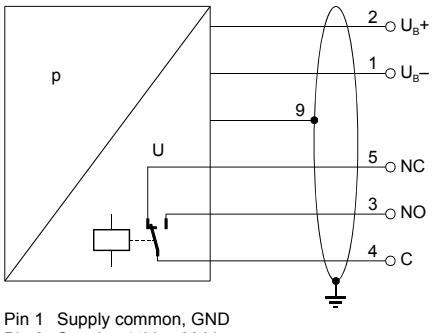

Pin 1 Supply common, GND
Pin 2 Supply +14V ... 30 V
Pin 3 Relay n.o.
Pin 4 Relay common
Pin 5 Relay n.c.
Pin 6 Internal common RxD
Pin 7 Internal common TxD
Pin 8 Internal common (com)
Pin 9 Housing (Chassis Ground)

2. Connect the cable to the vacuum switch.

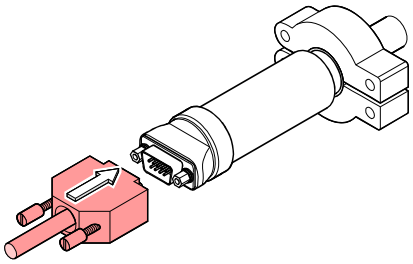

Operation

The product is ready for operation as soon as it has been installed.

The gauge is factory calibrated while "standing upright". Due to changing the mounting orientation, a low zero drift could occur (0.05 % F.S.).

Setpoint, Switching Characteristics

The setpoint can be read and set to any pressure within the setting range of the vacuum switch with the communication software (→ 🕮 [1]).

The switching characteristics of the setpoint can be programmed with the communication software (→ 🕮 [1]).

Low Trip Point (default)

If the pressure in the vacuum system is lower than the setpoint, the relay is closed.

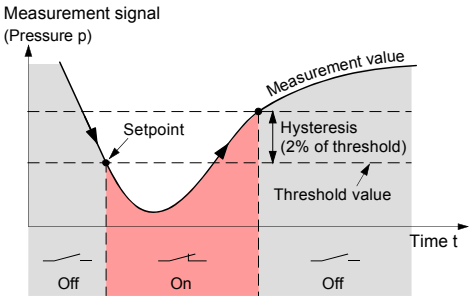

Deinstallation

DANGER

DANGER: contaminated parts

Contaminated parts can be detrimental to health and environment.

Before beginning to work, find out whether any parts are contaminated. Adhere to the relevant regulations and take the necessary precautions when handling contaminated parts.

Caution

Caution: vacuum component

Dirt and damages impair the function of the vacuum component.

When handling vacuum components, take appropriate measures to ensure cleanliness and prevent damages.

Caution

Caution: dirt sensitive area

Touching the product or parts thereof with bare hands increases the desorption rate.

Always wear clean, lint-free gloves and use clean tools when working in this area.

1. Vent the vacuum system.
2. Put the vacuum switch out off operation.
3. Unplug the sensor cable.

   Before connecting or disconnecting the product, turn off the control system.

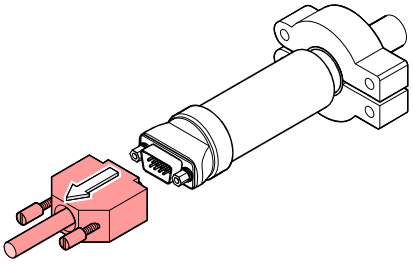

4. Remove the vacuum switch from the vacuum system and install the protective lid.

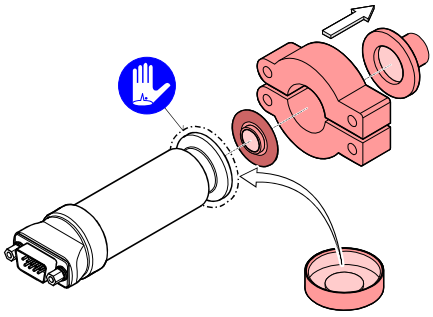

Maintenance, Repair

Under clean operating conditions, the product requires no maintenance.

The product is factory calibrated while "standing upright". Due to long time operation, contamination, or operation in other mounting orientation a zero adjustment may become necessary.

We recommend returning the product to your local INFICON service center for service.

Vacuum switch failures due to contamination or wear and tear are not covered by the warranty.

INFICON assumes no liability and the warranty becomes null and void if any repair work is carried out by the end-user or third parties.

Returning the Product

WARNING

WARNING: forwarding contaminated products

Contaminated products (e.g. radioactive, toxic, caustic or microbiological hazard) can be detrimental to health and environment.

Products returned to INFICON should preferably be free of harmful substances. Adhere to the forwarding regulations of all involved countries and forwarding companies and enclose a duly completed declaration of contamination *).

*) Form under www.inficon.com

Products that are not clearly declared as "free of harmful substances" are decontaminated at the expense of the customer.

Products not accompanied by a duly completed declaration of contamination are returned to the sender at his own expense.

Disposal

DANGER

DANGER: contaminated parts

Contaminated parts can be detrimental to health and environment.

Before beginning to work, find out whether any parts are contaminated. Adhere to the relevant regulations and take the necessary precautions when handling contaminated parts.

WARNING

WARNING: substances detrimental to the environment

Products or parts thereof (mechanical and electric components, operating fluids etc.) can be detrimental to the environment.

Dispose of such substances in accordance with the relevant local regulations.

Separating the components

After disassembling the product, separate its components according to the following criteria:

- Contaminated components

  Contaminated components (radioactive, toxic, caustic, or biological hazard etc.) must be decontaminated in accordance with the relevant national regulations, separated according to their materials, and disposed of.

- Other components

  Such components must be separated according to their materials and recycled.

Accessories

	Ordering number
Communication adapter with USB connector (2 m)	303-336

Further Information

[1] www.inficon.com
Communication software VSA200, VSD200

EC Declaration of Conformity

We, INFICON, hereby declare that the equipment mentioned below complies with the provisions of the Directive relating to electromagnetic compatibility 2004/108/EC.

Products

Vacuum Switch

VSA200, VSD200

Standards

Harmonized and international/national standards and specifications:

- EN 61326-1:1997 + A1:1998 + A2:2001 + A3:2003
  (EMC requirements for electrical equipment for measurement, control and laboratory use)

Manufacturer / Signatures

INFICON AG, Alte Landstraße 6, LI-9496 Balzers

17 January 2010	17 January 2010
Dr. Urs Wälchli Managing Director	Alex Nef Product Manager

INFICON

LI–9496 Balzers
Liechtenstein
Tel +423 / 388 3111
Fax +423 / 388 3700
reachus@inficon.com

www.inficon.com